smartworld

Door Loop for Mortise Mounting

Model: SWC-42/42L

Basic Instruction

Door loop is made of excellent material,Seiko quality,Special design,Applicable to use for access control,to protect the wire when install the elctric lock,magnetic contact,alarm button on the door, convenient and beautiful.

Specification

SWC-42

Size: 290Lx25Wx12H(mm)DIA
Suitable Range: Prevent the wire from malicious damage
Standard Structure: Alloy Materail, Thickened Ripple Tube
Finished for Shell: Painted by high temperature
Weight: 0.27kg

SWC-42L

Size: 542Lx24Wx17H(mm)DIA
Suitable Range: Prevent the wire from malicious damage
Standard Structure: Alloy Materail, Thickened Ripple Tube
Finished for Shell: Painted by high temperature
Weight: 0.4kg

Dimension

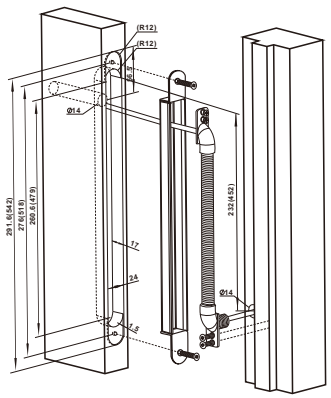

SWC-42/(SWC-42L)

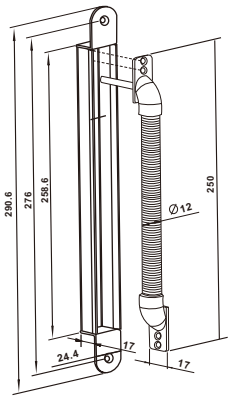

SWC-42

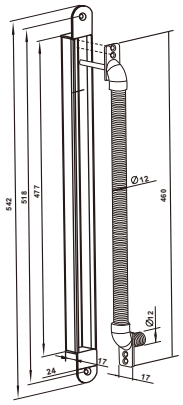

SWC-42L

Installation

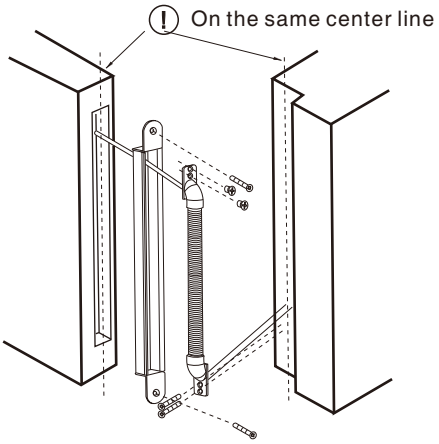

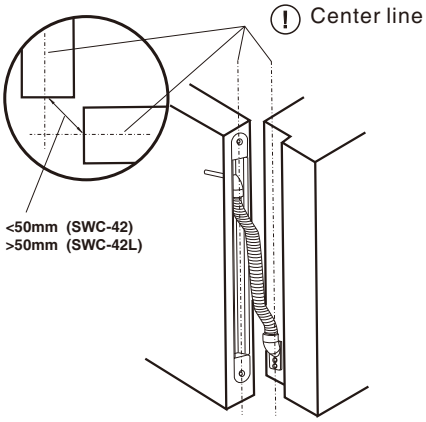

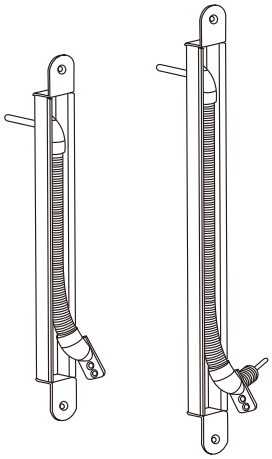

SWC-42,SWC-42L